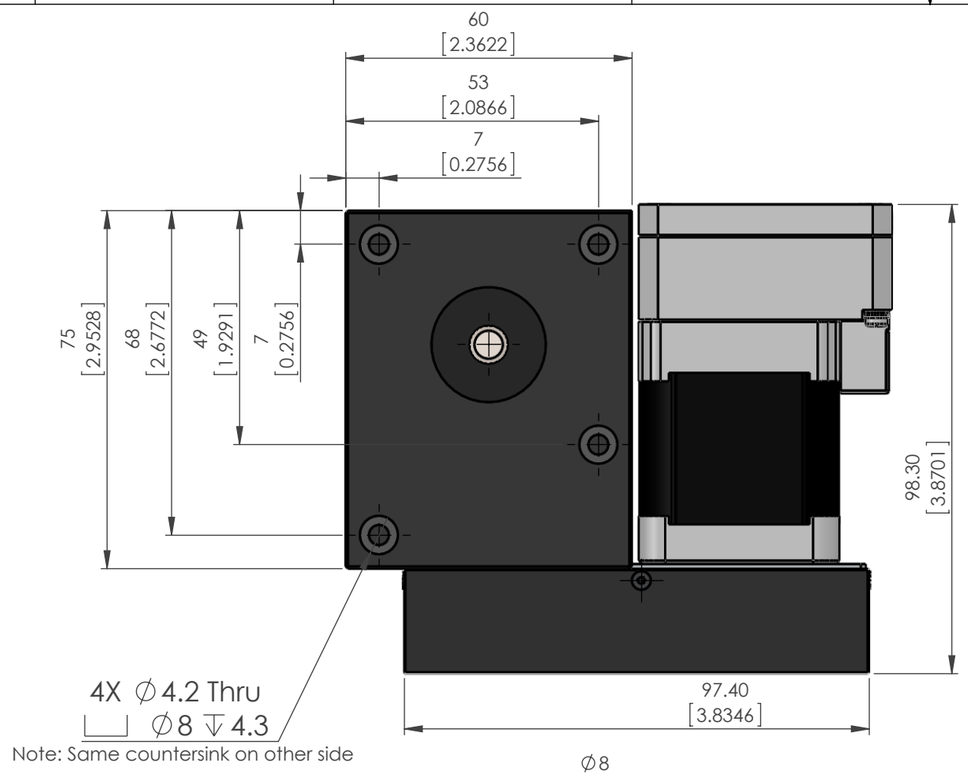

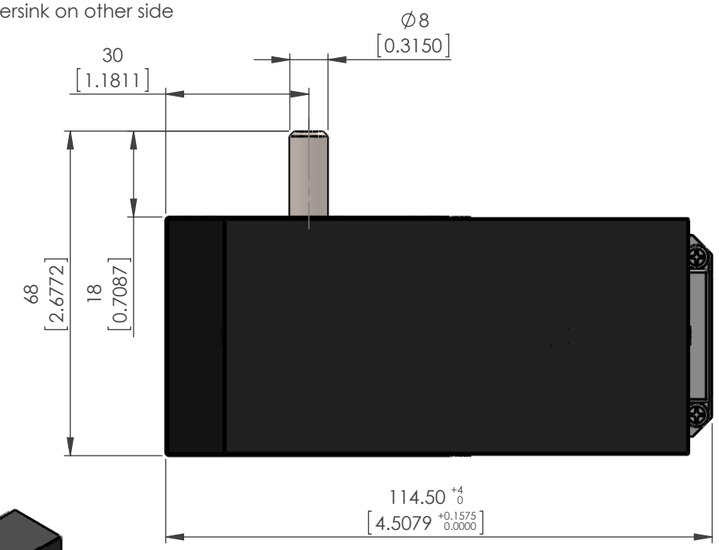

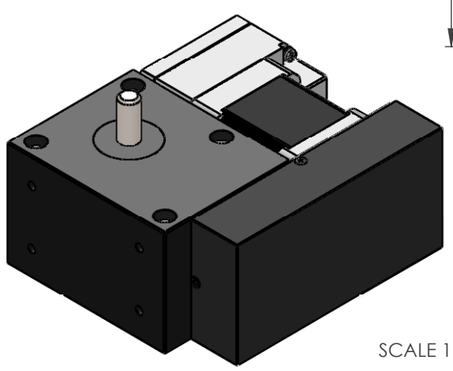

SCALE 1:2

Technical Data

Gear Ratio	10:1	20:1
Nominal Output Torque (Nm)	3.4	6.8
Maximum Output Torque (Nm)	5.0	10
Output Backlash (arcmin)	20	
Maximum Output Speed (RPM)	300	150
Output Maximum Overhang Load (N)*	19	
Motor Type	CM1-X-17L30 (30W)	

*OHL measured at the center of shaft

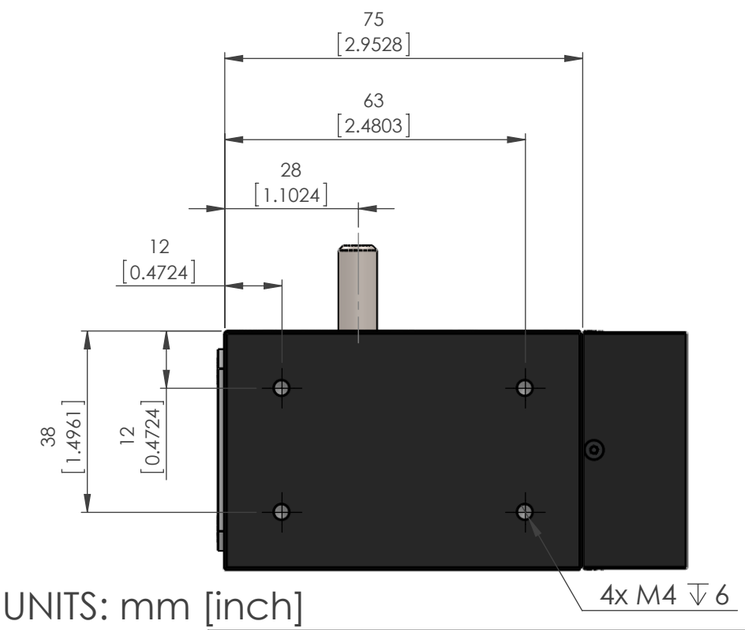

UNITS: mm [inch]

Unless otherwise specified, tolerance to be:CNS 4018 IT 14 Linear measures

0.5~3	± 0.1
3~6	± 0.1
6~30	± 0.2
30~120	± 0.3
120~315	± 0.5

PROPRIETARY AND CONFIDENTIAL
THE INFORMATION CONTAINED IN THIS DRAWING IS THE SOLE PROPERTY OF MYOSTAT MOTION CONTROL INC. ANY REPRODUCTION IN PART OR AS A WHOLE WITHOUT THE WRITTEN PERMISSION OF MYOSTAT MOTION CONTROL INC. IS PROHIBITED.

	NAME	DATE
DRAWN	M. Dank	July 17, 2012
CHECKED		
ENG APPR.		

Myostat Motion Control Inc.
+1 905-836-4441
www.myostat.ca

DO NOT SCALE DRAWING | DIMENSIONS ARE METRIC

TITLE: 90 Size HY Gearbox-Motor Assembly

SIZE	PRT. NO.	REV
B	HY-090-0X0-17L30C	4.0

SCALE: 1:2 | WEIGHT: - | SHEET 1 OF 1