Technical Data

	Unit	Value	
Ball Screw Lead	mm	1	2
Max. Velocity (w/11L30)	mm/s	50	100
Force (w/ 11L30)	N	489	244
Force (w/ 11S30)		152	76
		H Grade	P Grade
Repeatability	mm	±0.004	±0.003
Running Parallelism		0.02	0.01
Positioning Accuracy		0.04	0.02
Backlash		0.01	0.002
Starting Torque	N/cm	0.4	0.8

Bill of Materials

Part No.	Description	Quantity
KR15	Actuator	1
KR15-BKT-NEMA11	Bracket	1
11L30A / 11S30A	Motor	1
RCLA13C-3-5	Coupling	1
M2.5-12mm	Screws	4
M2.5-6mm	Screws	4

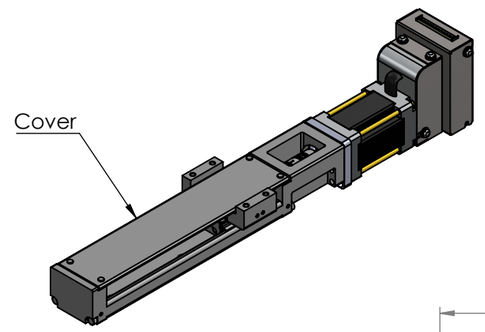

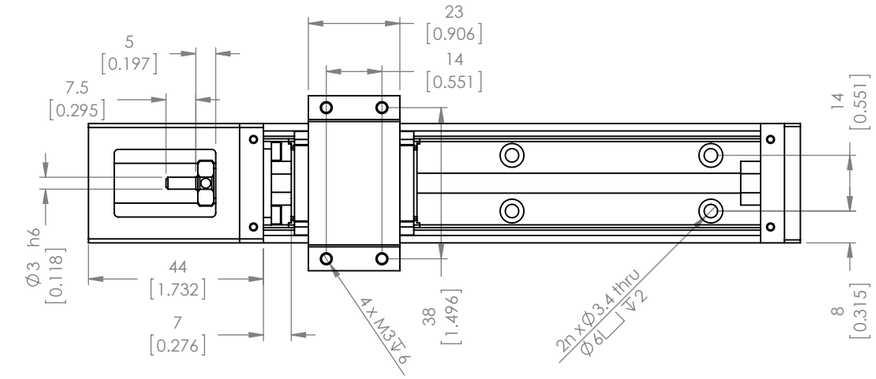

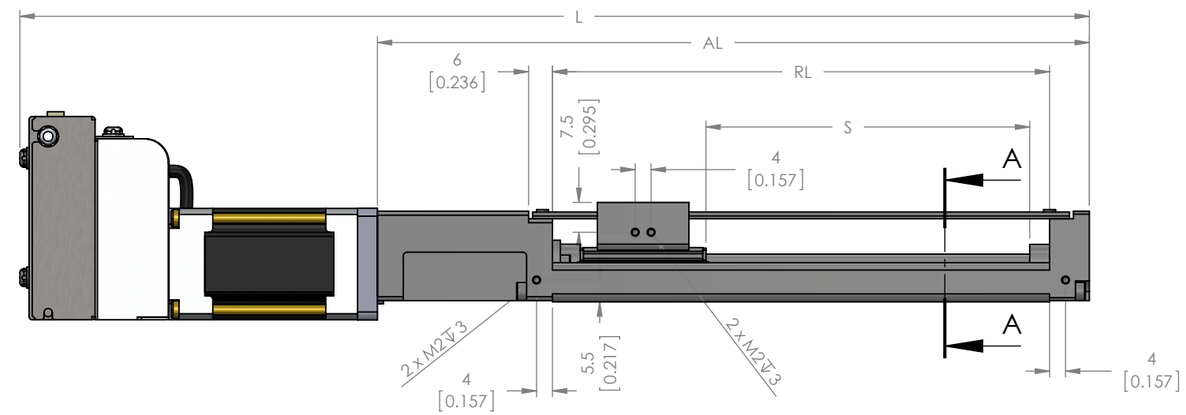

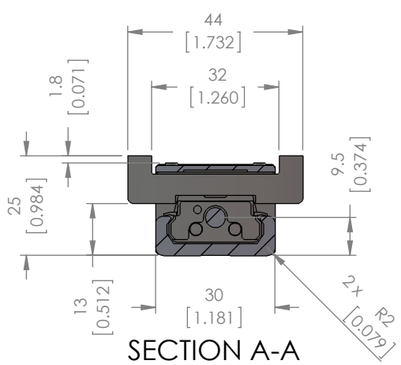

SECTION A-A

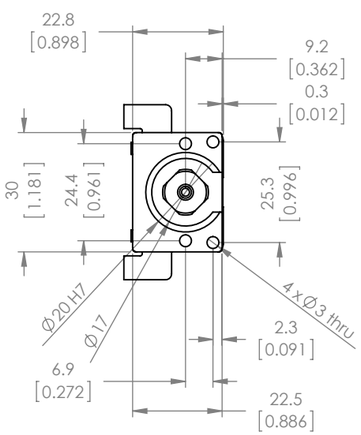

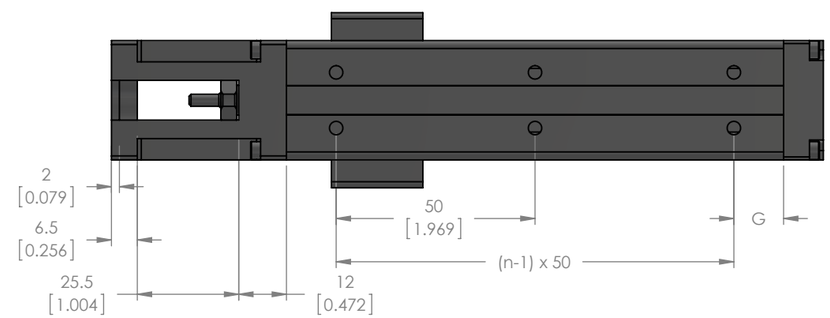

*For single block, with cover. Please contact for more details.

UNITS: mm [inch]

PA15-01-□□□	S - Stroke Length	RL - Rail Length	AL - Actuator Length	L - Overall Length		G	n	Mass (kg)*	
				w/ 11S30	w/ 11L30			w/ 11S30	w/ 11L30
025	31.4 [1.236]	75 [2.953]	129 [5.079]	203.4 [8.008]	218.9 [8.618]	12.5 [0.492]	2	0.504	0.564
050	56.4 [2.220]	100 [3.937]	154 [6.063]	228.4 [8.992]	243.9 [9.602]	25 [0.984]	2	0.534	0.594
075	81.4 [3.205]	125 [4.921]	179 [7.047]	253.4 [9.976]	268.9 [10.587]	12.5 [0.492]	3	0.574	0.634
100	106.4 [4.189]	150 [5.906]	204 [8.032]	278.4 [10.961]	293.9 [11.571]	25 [0.984]	3	0.604	0.664
125	131.4 [5.173]	175 [6.890]	229 [9.016]	303.4 [11.945]	318.9 [12.555]	12.5 [0.492]	4	0.634	0.694
150	156.4 [6.157]	200 [7.874]	254 [10]	328.4 [12.929]	343.9 [13.539]	25 [0.984]	4	0.674	0.734

Unless otherwise specified, tolerance to be:CNS 4018 IT 14 Linear measures

0.5~3	± 0.1
3~6	± 0.1
6~30	± 0.2
30~120	± 0.3
120~315	± 0.5

PROPRIETARY AND CONFIDENTIAL
THE INFORMATION CONTAINED IN THIS DRAWING IS THE SOLE PROPERTY OF MYOSTAT MOTION CONTROL INC. ANY REPRODUCTION IN PART OR AS A WHOLE WITHOUT THE WRITTEN PERMISSION OF COOLMUSCLE INC. IS PROHIBITED.

	NAME	DATE
DRAWN	M.Mitchell	14-July-2014
CHECKED		
ENG APPR.		

Myostat Motion Control Inc.
1+ 905-836-4441
www.myostat.ca

DO NOT SCALE DRAWING | DIMENSIONS ARE METRIC

TITLE:

PA-Series Integrated Actuators

SIZE	PRT. NO.	REV
B	PA15-X-0X-XXX-X-10XX-11X30-X	0.0

SCALE: 2:3 | WEIGHT: - | SHEET 1 OF 2

Technical Data

	Unit	Value	
Ball Screw Lead	mm	1	2
Max. Velocity (w/ 11L30)	mm/s	50	100
Force (w/ 11L30)	N	489	244
Force (w/ 11S30)		152	76
		H Grade	P Grade
Repeatability	mm	±0.004	±0.003
Running Parallelism		0.02	0.01
Positioning Accuracy		0.04	0.02
Backlash		0.01	0.002
Starting Torque	N/cm	0.4	0.8

Bill of Materials

Part No.	Description	Quantity
KR15	Actuator	1
KR15-BKT-NEMA11	Bracket	1
11L30A / 11S30A	Motor	1
RCLA13C-3-5	Coupling	1
M2.5-12mm	Screws	4
M2.5-6mm	Screws	4

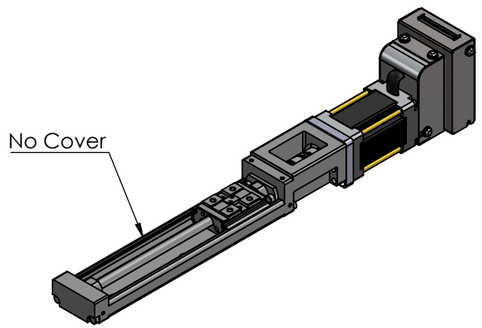

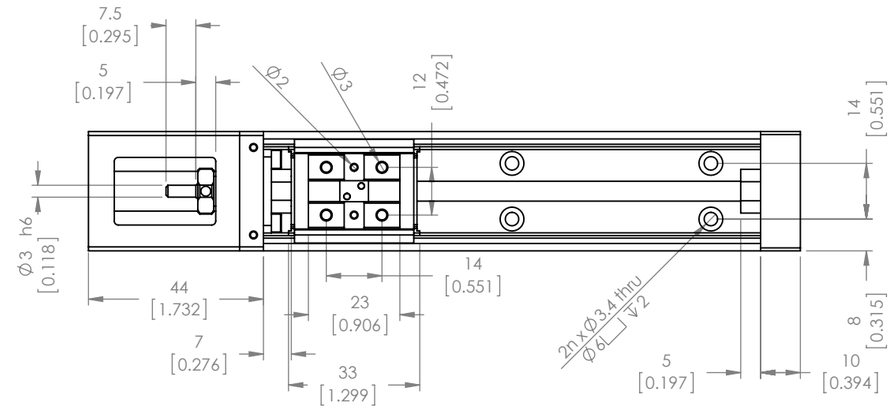

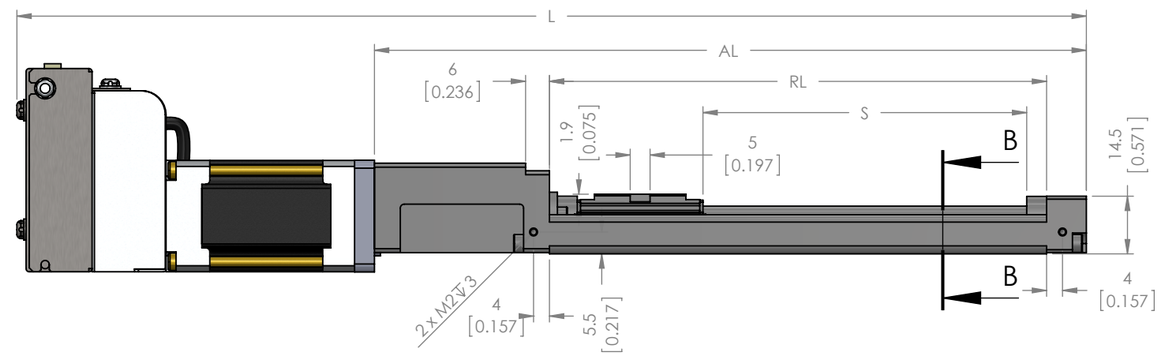

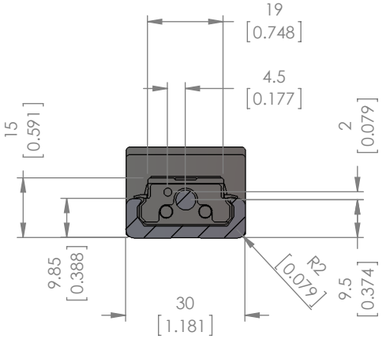

SECTION B-B

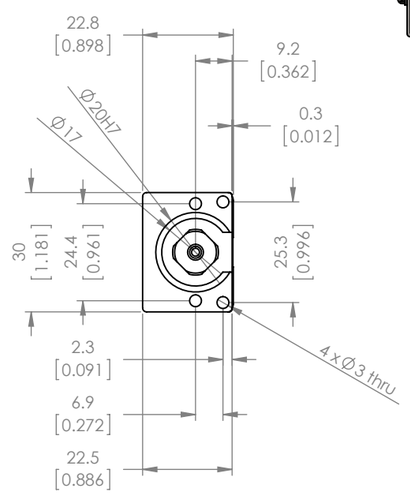

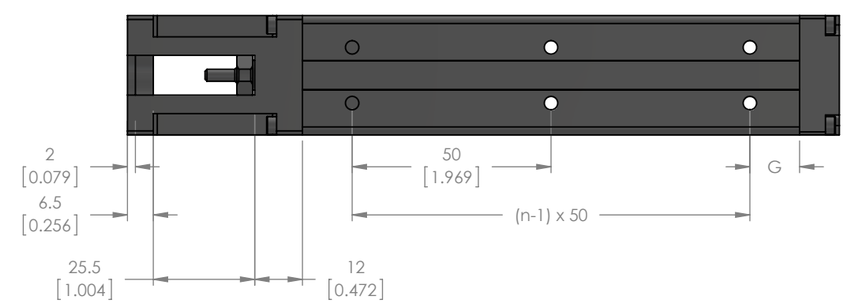

*For single block, no cover. Please contact for more details.

UNITS: mm [inch]

PA15-01-□□□	S - Stroke Length	RL - Rail Length	AL - Actuator Length	L - Overall Length		G	n	Mass (kg)*	
				w/ 11S30	w/ 11L30			w/ 11S30	w/ 11L30
025	31.4 [1.236]	75 [2.953]	129 [5.079]	203.4 [8.008]	218.9 [8.618]	12.5 [0.492]	2	0.464	0.524
050	56.4 [2.220]	100 [3.937]	154 [6.063]	228.4 [8.992]	243.9 [9.602]	25 [0.984]	2	0.494	0.554
075	81.4 [3.205]	125 [4.921]	179 [7.047]	253.4 [9.976]	268.9 [10.587]	12.5 [0.492]	3	0.524	0.584
100	106.4 [4.189]	150 [5.906]	204 [8.032]	278.4 [10.961]	293.9 [11.571]	25 [0.984]	3	0.554	0.614
125	131.4 [5.173]	175 [6.890]	229 [9.016]	303.4 [11.945]	318.9 [12.555]	12.5 [0.492]	4	0.584	0.644
150	156.4 [6.157]	200 [7.874]	254 [10]	328.4 [12.929]	343.9 [13.539]	25 [0.984]	4	0.614	0.674

Unless otherwise specified, tolerance to be:CNS 4018 IT 14 Linear measures

0.5~3	± 0.1
3~6	± 0.1
6~30	± 0.2
30~120	± 0.3
120~315	± 0.5

PROPRIETARY AND CONFIDENTIAL
THE INFORMATION CONTAINED IN THIS DRAWING IS THE SOLE PROPERTY OF MYOSTAT MOTION CONTROL INC. ANY REPRODUCTION IN PART OR AS A WHOLE WITHOUT THE WRITTEN PERMISSION OF COOLMUSCLE INC. IS PROHIBITED.

	NAME	DATE
DRAWN	M.Mitchell	14-July-2014
CHECKED		
ENG APPR.		

Myostat Motion Control Inc.
1+ 905-836-4441
www.myostat.ca

DO NOT SCALE DRAWING | DIMENSIONS ARE METRIC

TITLE:

PA-Series Integrated Actuators

SIZE	PRT. NO.	REV
B	PA15-X-0X-XXX-X-00XX-11X30-X	0.0

SCALE: 2:3 | WEIGHT: - | SHEET 2 OF 2